AXENT
SWITZERLAND

AXENT.ONE C

VANITY BASIN L31.0480.00X1.0

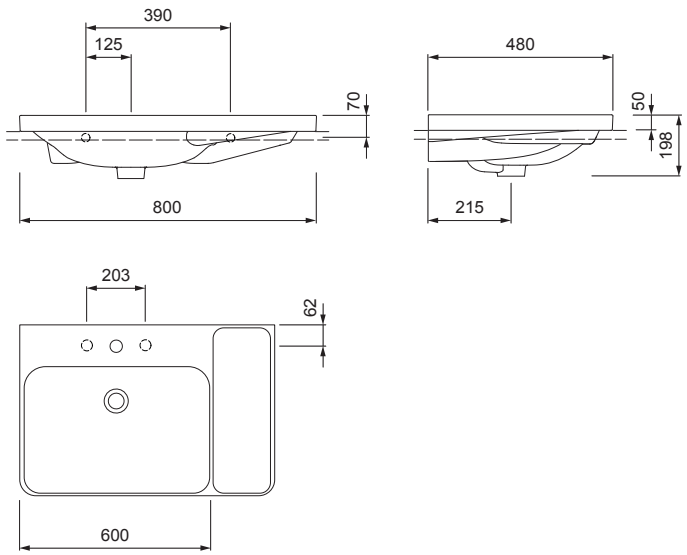

PRODUCT DETAILS

Dimensions / Weight	800 x 480 mm / 27.0 kg
Installation	With furniture or wall-hung
Tap fitting	With or without tap platform
Material	Fine Fire Clay with AXENT easy-clean surface
Overflow	With overflow including chrome clip
Scope of delivery	Ceramic including fixing material

SPECIFICATION TEXT

AXENT.ONE C Vanity basin, design by Matteo Thun & Antonio Rodriguez. Sanitary ware without tap platform. With overflow. Square basin shape with shelf space right. AXENT easy-clean surface. Dimension (wxdxh) 800/480/198 mm. White. Oder no. L31.0480.0001.1

AXENT.ONE C Vanity basin, design by Matteo Thun & Antonio Rodriguez. Sanitary ware with tap platform for single-hole faucet. With overflow. Square basin shape with shelf space right. AXENT easy-clean surface. Dimension (wxdxh) 800/480/198 mm. White. Oder no. L31.0480.0011.1

AXENT.ONE C Vanity basin, design by Matteo Thun & Antonio Rodriguez. Sanitary ware with tap platform for three-hole faucet. With overflow. Square basin shape with shelf space right. AXENT easy-clean surface. Dimension (wxdxh) 800/480/198 mm. White. Oder no. L31.0480.0031.1

AXENT International AG
info@axentbath.ch
www.axentbath.com

All drawings contain the necessary measurements which are subject to standard tolerances. They are stated in mm and are non-binding. Exact measurements, in particular for customised installation scenarios, can only be taken from the finished ceramic piece.