AXENT
SWITZERLAND

WALL-MOUNTED TOILET

1

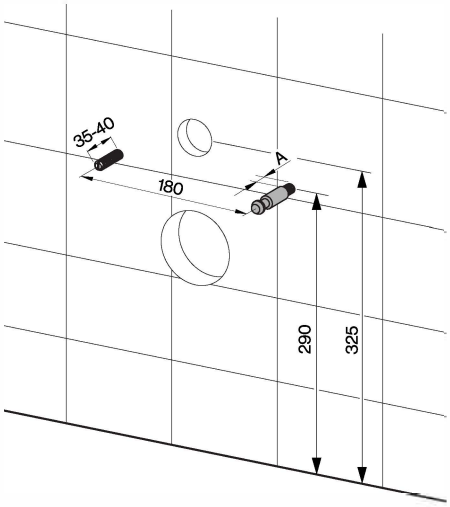

A	W58.0457.000X.0	15 ± 1
	W55.0456.000X.0	12 ± 1

2

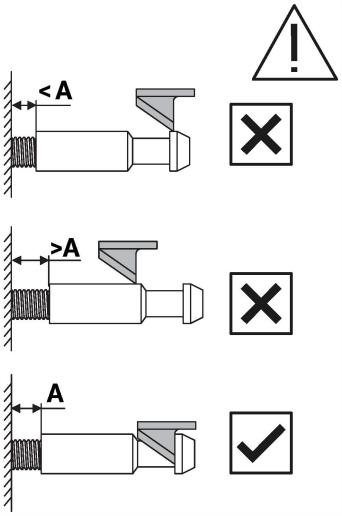

3

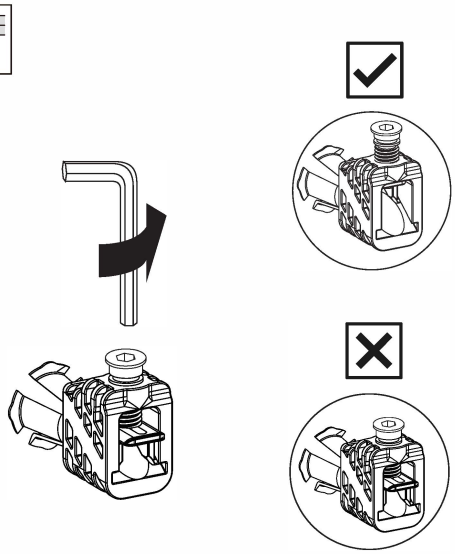

4

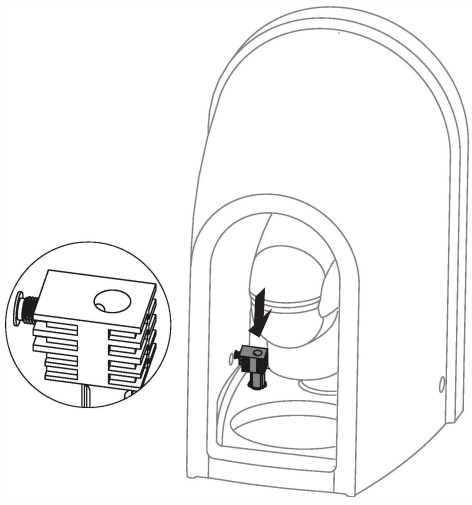

5

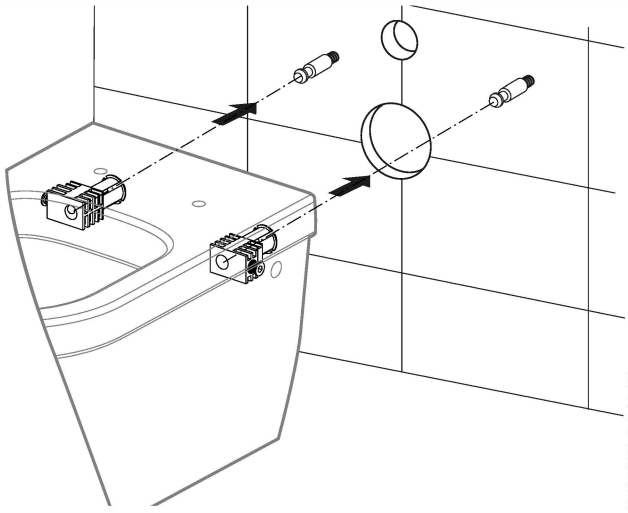

224032500700 / 05.09

AXENT International AG
info@axentbath.ch
www.axentbath.com

WALL-HUNG TOILET

6

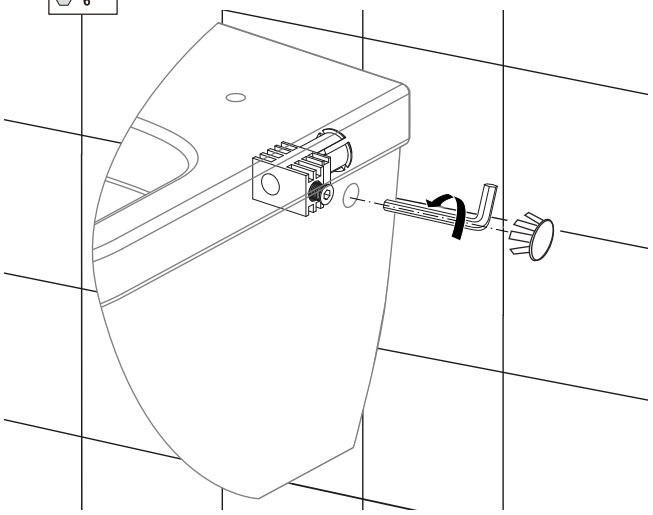

7

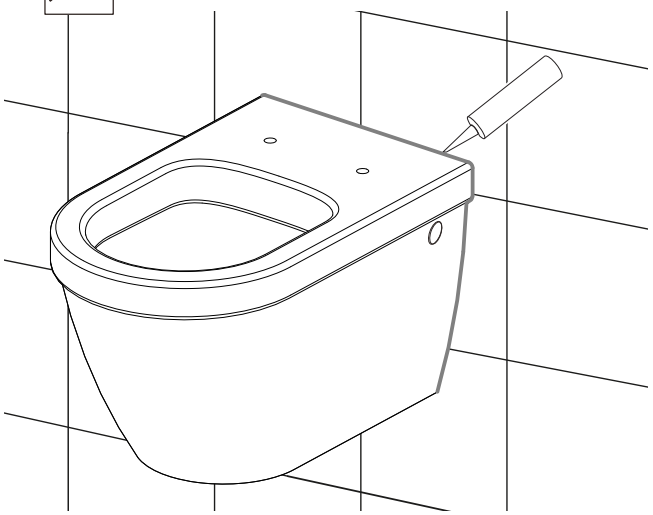

2240325007 00 / 05.09

AXENT International AG
info@axentbath.ch
www.axentbath.com